modular

Kunde _____ Menge _____

Projekt _____ Lage _____

## ROC 700

**Modell:** R70/40PLC/T **Cod:** MP01734143050



### Technische Daten

| | |
|---|---|
| **Modularer Aufbau:** | Top |
| **Abmessungen (mm):** | 400x730x280 |
| **Nettovolumen (m3):** | 0,082 |
| **Verpackungsabmessungen (mm):** | 480x856x475 |
| **Bruttogewicht (kg):** | 32,4 |
| **Bruttovolumen (m3):** | 0,195 |

### Eigenschaften

| | |
|---|---|
| **Platte:** | Aus Edelstahl AISI 304 mit Dicke 20/10 mm |
| **Vollauszug für Schubladen:** | Vollauszug für Schubladen |

In order to constantly offer the best possible products we reserve the right to make changes on technical specifications without incurring any obligation for equipment previosly or subsequently sold.

Neutral Element mit Schublade, top

## Technische Zeichnung

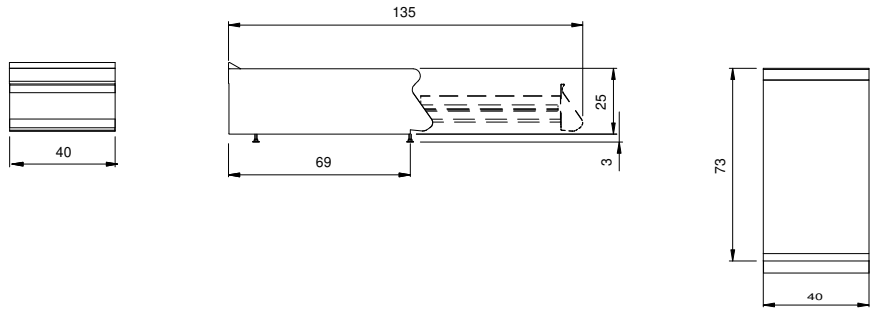


In order to constantly offer the best possible products we reserve the right to make changes on technical specifications without incurring any obligation for equipment previosly or subsequently sold.